# ARTWORK APPROVAL FORM

| ORDER DETAILS | | ITEM DETAILS | | MATERIAL COLOURS | | | | |
|---|---|---|---|---|---|---|---|---|
| ORDER NUMBER: | X | FABRIC: | X | FABRIC: | ☐ | NATURAL / WHITE / X | X: | ☐ X |
| ITEM CODE: | MB8103 | GRAMMAGE: | X | HANDLE: | ☐ | NATURAL / WHITE / X | X: | ☐ X |
| QUANTITY: | X | HANDLE: | SELF MATERIAL | STITCHES: | ☐ | MATCHING | X: | ☐ X |
| ITEM SIZE: | 38 x 42 x 10 cm | HANDLE SIZE: | 70 x 2,5 cm | X: | ☐ | X | X: | ☐ X |
| | | X: | X | X: | ☐ | X | X: | ☐ X |

SCALE 1:10

**FRONT**
TECHNIQUE -
LOGO -
SIZE -

ATTENTION 1

**BACK**
- TECHNIQUE
- LOGO
- SIZE

ATTENTION 1

**LEFT SIDE**
TECHNIQUE -
LOGO -
SIZE -

ATTENTION 1

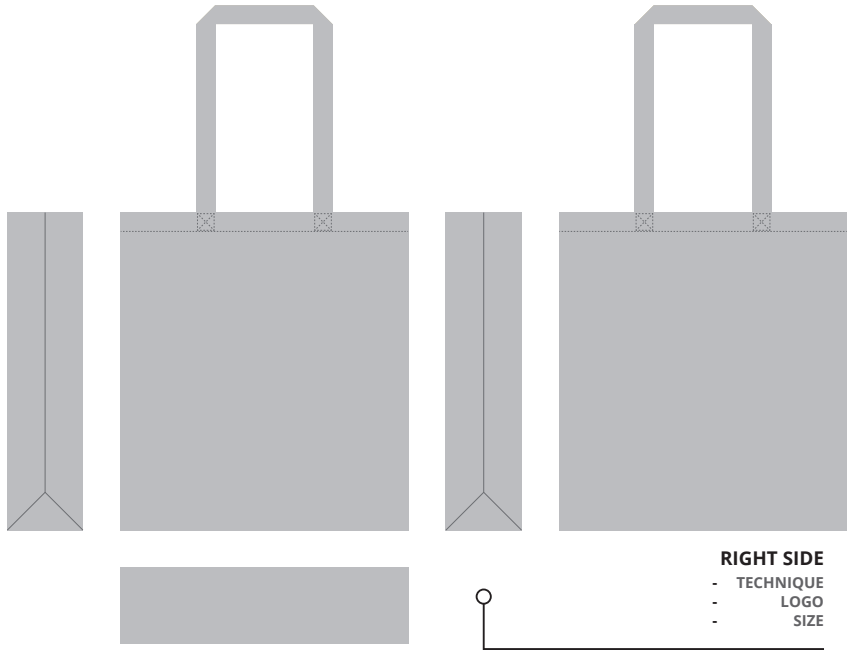

**RIGHT SIDE**
- TECHNIQUE
- LOGO
- SIZE

ATTENTION 1

**BOTTOM**
TECHNIQUE -
LOGO -
SIZE -

ATTENTION 1

yourChoice

GENERAL COMMENT:

GENERAL COMMENT:
PLEASE NOTICE THAT THE LOGO POSITIONING ON THE FRONT CAN NOT BE ALIGNED EXACTLY WITH THE DESIGN ON THE BACK.

ATTENTION 1:

ATTENTION 2:

# MB8103

## COTTON SHOPPING BAG

| | |
|---|---|
| Fabric: | Cotton (140 gsm)<br>Organic cotton (140 gsm)<br>Cotton (180 gsm)<br>Organic cotton (180 gsm)<br>Cotton canvas (280 gsm)<br>Organic Cotton canvas (280 gsm) |
| Item size: | 38 x 42 x 10 cm |
| Handle: | Self material |
| Handle size: | 70 x 2.5 cm |
| Technique: | Silkscreen (Max. 30 x 30 cm)<br>Digital printing<br>Heat transfer (Max. 15 x 15 cm / 30 x 30 cm) |

SCALE 1:1

### COTTON - STANDARD COLOUR

NATURAL

WHITE

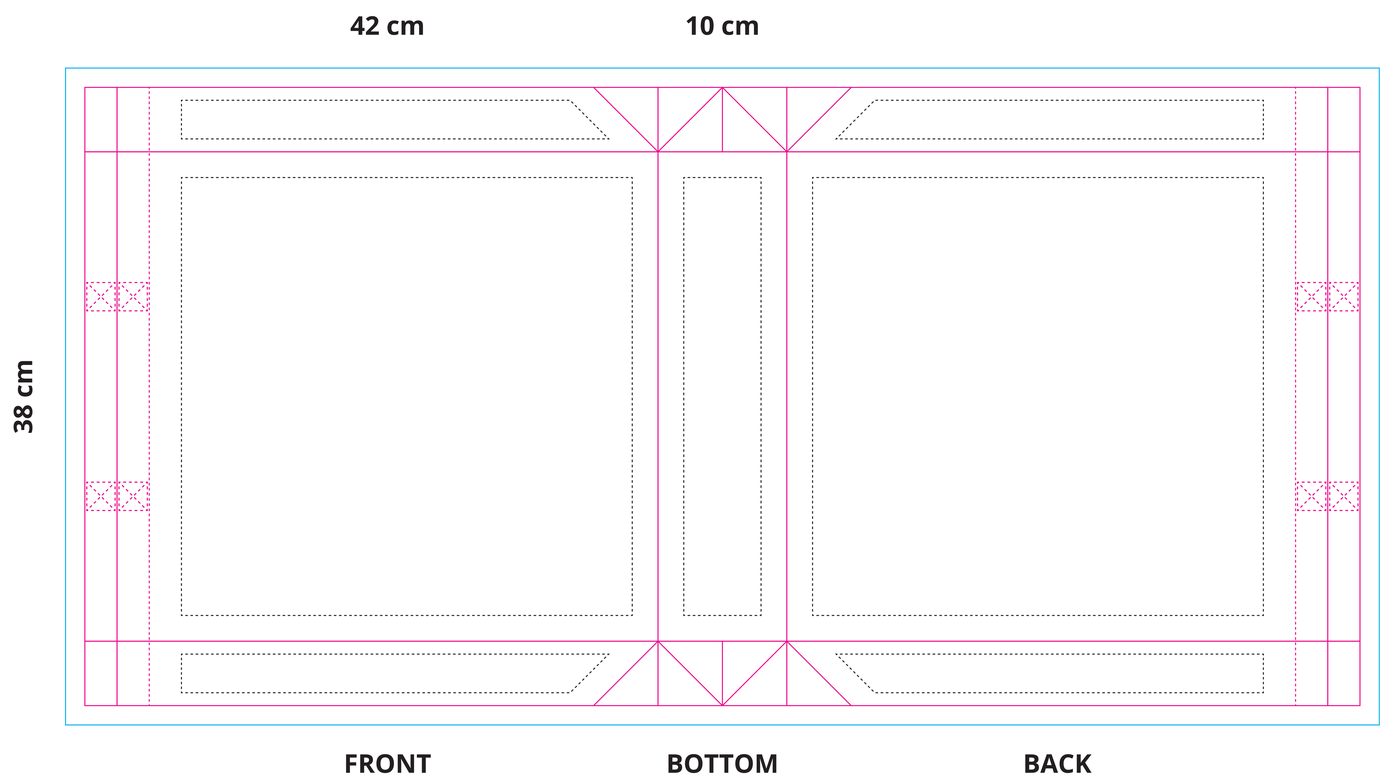


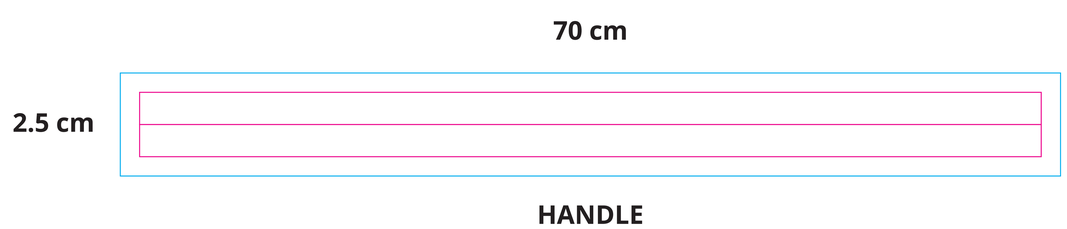


**LEGEND:**

- BLEED AREA
- FINISHED COMPONENT
- SAFE PRINT AREA