ARTWORK APPROVAL FORM

ORDER DETAILS

ORDER NUMBER:	X
ITEM CODE:	MH2337
QUANTITY:	X

ITEM DETAILS

FABRIC:	PREMIUM COTTON TWILL 260 gsm + POLYESTER
ITEM SIZE:	STANDARD
CLOSURE:	HOOK AND LOOP / METAL BUCKLE / SUNDAY BUCKLE
X:	

MATERIAL COLOURS

PANELS:	☐	X	BUTTON:	☐	X	VISOR TOP:	☐ WHITE
BUCKLE:	☐	X	EYELETS:	☐	X	VISOR BOTTOM:	☐ WHITE
X:	☐	X	STITCHES:	☐	X	SWEATBAND:	☐ X
X:	☐	X	SANDWICH:	☐	NONE	SEAM TAPE:	☐ X
X:	☐	X	STRAP:	☐	X	X:	☐ X

SCALE 1:5

FRONT
TECHNIQUE -
LOGO -
SIZE -
ATTENTION 1

BACK
- TECHNIQUE
- LOGO
- SIZE
ATTENTION 1

STRAP / BUCKLE
- TECHNIQUE
- LOGO
- SIZE
ATTENTION 1

LEFT SIDE
TECHNIQUE -
LOGO -
SIZE -
ATTENTION 1

RIGHT SIDE
- TECHNIQUE
- LOGO
- SIZE
ATTENTION 1

SEAM TAPE
- TECHNIQUE
- LOGO
- SIZE
ATTENTION 1

VISOR TOP
TECHNIQUE SUBLIMATION
LOGO FULL COLOR
SIZE CMYK
ATTENTION 1

VISOR BOTTOM
SUBLIMATION TECHNIQUE
FULL COLOR LOGO
CMYK SIZE
ATTENTION 1

yourChoice

GENERAL COMMENT:
DUE TO THE NATURE OF FULL COLOUR PRINTING THE OUTCOME OF THE FINAL COLOUR RESULT CAN BE SLIGHTLY DIFFERENT IN A REAL SAMPLE.

GENERAL COMMENT:

ATTENTION 1:

ATTENTION 2:

MH2337

FLAT SUBLIMATED VISOR CAP

Panels: 6
Profile: Medium
Fabric: Premium cotton twill on crown with polyester fabric on visor
Sandwich: No

Other info.: Flat visor, cotton sweatband & hook and loop closure

SCALE 1:1

PREMIUM COTTON TWILL 260 gsm (VISOR ONLY) - STANDARD COLOURS

WHITE

PREMIUM COTTON TWILL 260 gsm (PANELS ONLY) - STANDARD COLOURS

BLACK	3425 C
WHITE	1235 C
WARM GRAY 1 C	5535 C
200 C	195 C
1525 C	476 C
7530 C	296 C
423 C	7528 C
COOL GRAY 11 C	706 C
7427 C	7685 C
534 C	658 C
294 C	417 C
7763 C	

FACTORY DIE CUT

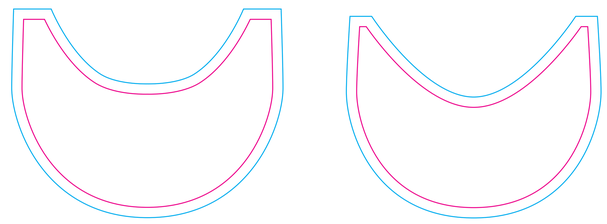

VISOR TOP VISOR BOTTOM

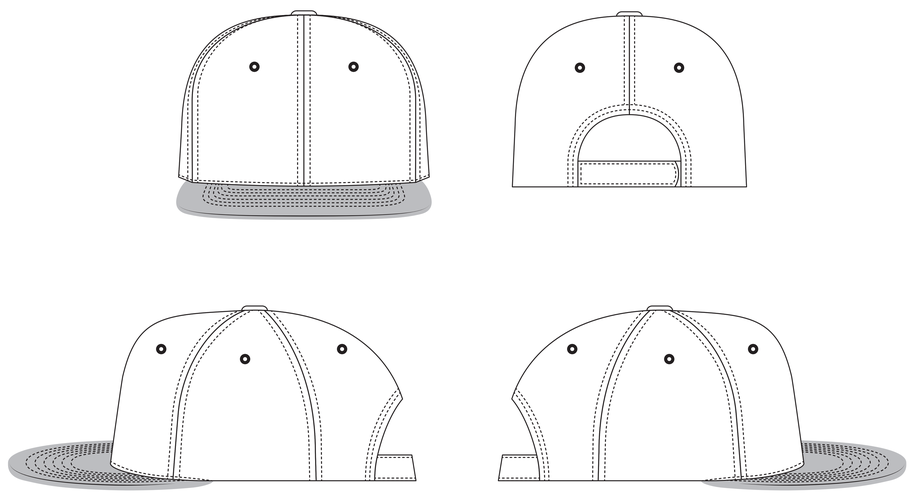

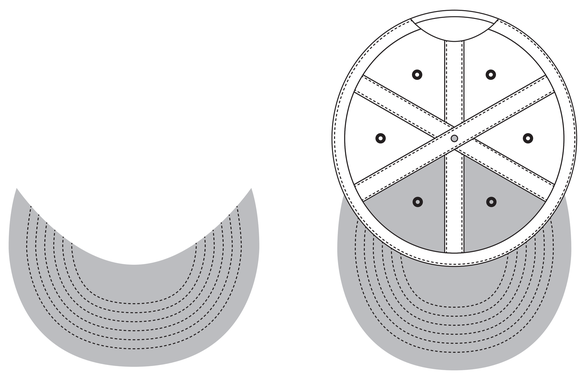

VISOR TOP INSIDE

STANDARD CLOSURE:

HOOK AND LOOP CLOSURE

OPTIONAL CLOSURE:

SUNDAY BUCKLE (SHINY NICKEL)

SUNDAY BUCKLE (MATT NICKEL)

METAL BUCKLE WITH TUCK IN SLIT (SHINY NICKEL)

METAL BUCKLE WITH TUCK IN SLIT (MATT NICKEL)

INSIDE PARTS:

SEAM TAPE - WIDTH 1,5 cm (FRAGMENT)

SWEATBAND - WIDTH 3 cm