ARTWORK APPROVAL FORM

ORDER DETAILS

ORDER NUMBER:	X
ITEM CODE:	MO4100
QUANTITY:	X
ITEM SIZE:	32 x 22 x 24 cm

ITEM DETAILS

FABRIC:	PPWL
GRAMMAGE:	140 gsm
HANDLE:	SELF MATERIAL
HANDLE SIZE:	70 x 2.5 cm
TRIMMING:	SELF MATERIAL

MATERIAL COLOURS

FABRIC:	☐ WHITE	X:	☐ X
HANDLE REF. COLOUR:	☐ X	X:	☐ X
TRIMMING REF. COLOUR:	☐ X	X:	☐ X
STITCHES:	☐ MATCHING	X:	☐ X
ZIPPER:	☐ X	X:	☐ X

LAMINATION

SHINY / MATT

SCALE 1:10

FRONT
TECHNIQUE -
LOGO -
SIZE -

ATTENTION 1

BACK
- TECHNIQUE
- LOGO
- SIZE

ATTENTION 1

LEFT SIDE
TECHNIQUE -
LOGO -
SIZE -

ATTENTION 1

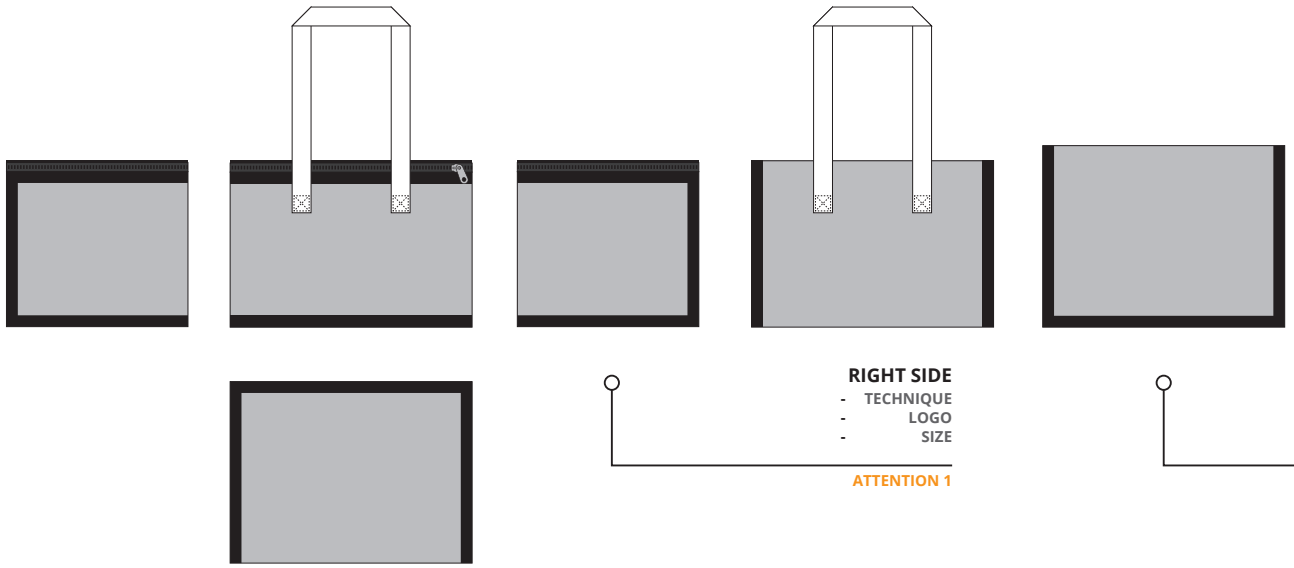

RIGHT SIDE
- TECHNIQUE
- LOGO
- SIZE

ATTENTION 1

TOP
- TECHNIQUE
- LOGO
- SIZE

ATTENTION 1

BOTTOM
TECHNIQUE -
LOGO -
SIZE -

ATTENTION 1

MATERIAL	STATIC	DYNAMIC
80 gsm NW	20 kg	5 kg
120 gsm NWL	20 kg	4 kg
140 gsm PPWL	20 kg	6 kg
140 gsm RPET L	20 kg	6 kg

Quality standard: Static: 1 hour hanging
Dynamic: 10 free fall drops at 4 inches / 10 cm.

yourChoice

GENERAL COMMENT:

GENERAL COMMENT:

ATTENTION 1:

ATTENTION 2:

MO4100

COOLER BAG

Item size:	32 x 22 x 24 cm
Handle:	Self material
Handle size:	70 x 2,5 cm
Techniques:	Full Colour Offset

SCALE 1:1

FABRIC - STANDARD COLOUR

WHITE

FABRIC - TYPES

PP WOVEN WITH LAMINATION (140 gsm)

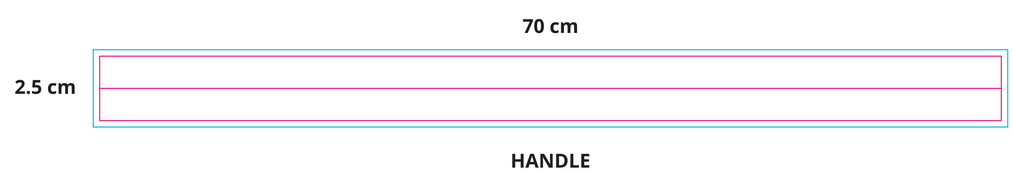

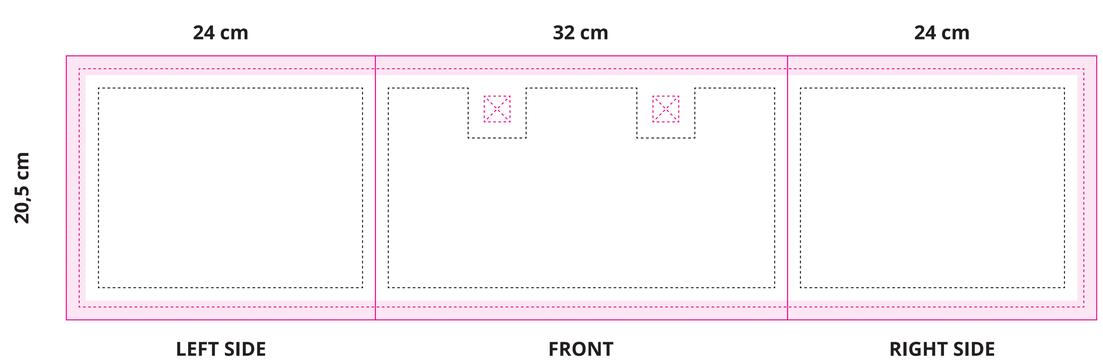

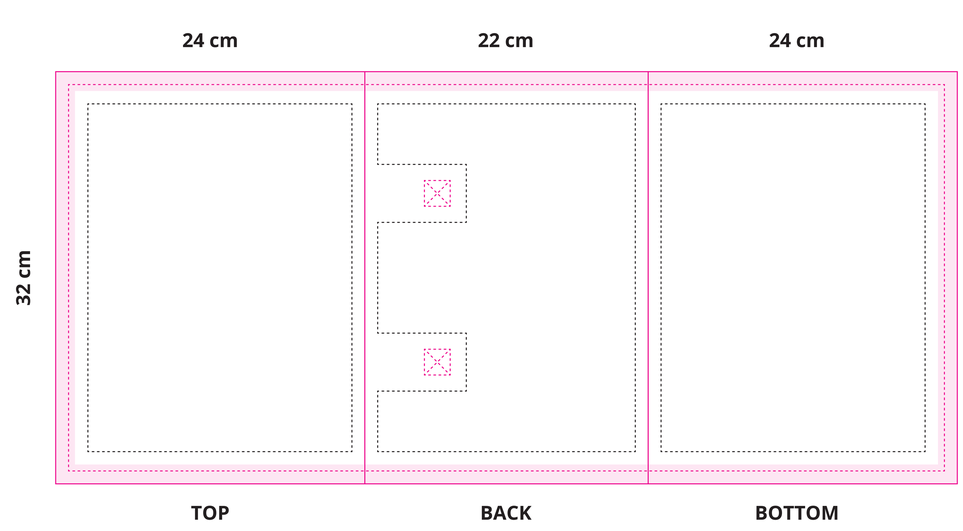

LEGEND:

- TRIMMING AREA
- FINISHED COMPONENT
- STITCHES
- SAFE PRINT AREA
- BLEED AREA

MATERIAL	STATIC	DYNAMIC
80 gsm NW	20 kg	5 kg
120 gsm NWL	20 kg	4 kg
140 gsm PPWL	20 kg	6 kg
140 gsm RPET L	20 kg	6 kg

Quality standard: Static: 1 hour hanging
Dynamic: 10 free fall drops at 4 inches / 10 cm.