ARTWORK APPROVAL FORM

ORDER DETAILS		ITEM DETAILS		MATERIAL COLOURS			
ORDER NUMBER:	X	FABRIC:	300D 2-TONE POLYESTER	FABRIC BAG:	☐ X	STITCHES:	☐ MATCHING
ITEM CODE:	YC9853	HANDLE:	STANDARD	FABRIC TOP:	☐ X	X:	☐ X
QUANTITY:	X	X:	X	FABRIC POCKET:	☐ X	X:	☐ X
ITEM SIZE:	29 x 20 x 35 cm	X:	X	STRAPS:	☐ X	X:	☐ X
		X:	X	ZIPPER:	☐ MATCHING	X:	☐ X

SCALE 1:10

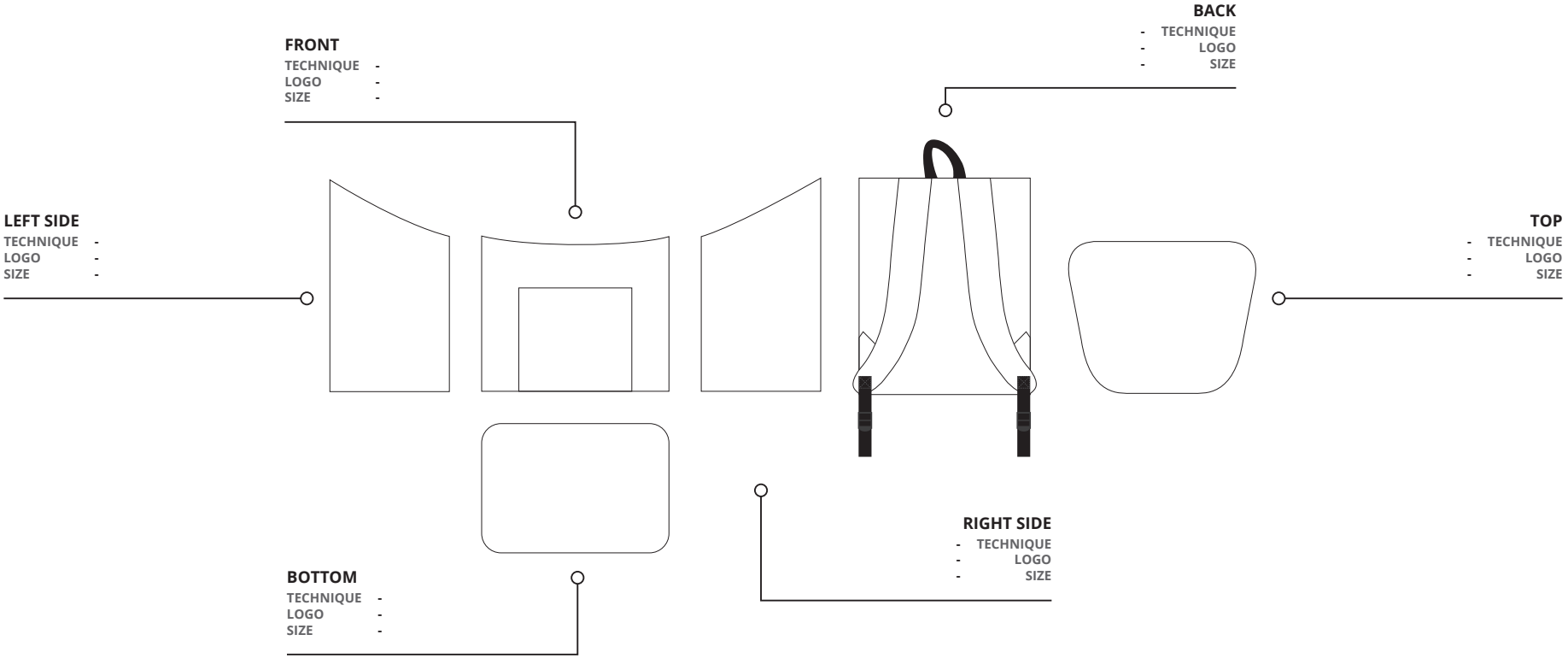

yourChoice

GENERAL COMMENT:

GENERAL COMMENT:

ATTENTION 1:

ATTENTION 2:

YC9853

COOLER BAG BACKPACK

Material:	300D 2-tone polyester 210D Polester (Lid and front pocket)
Item size:	29 x 20 x 35 cm
Optional label:	4 x 2 cm (folded)
Handle:	Self material
Technique:	Silkscreen (max. 15 x 15 cm) Heat transfer (max. 15 x 15 cm) Sublimated upper lid and front pocket only

SCALE 1:1

POLYESTER BODY - STANDARD COLOUR

7683 C	440 C
2955 U	431 U
7489 U	7658 C

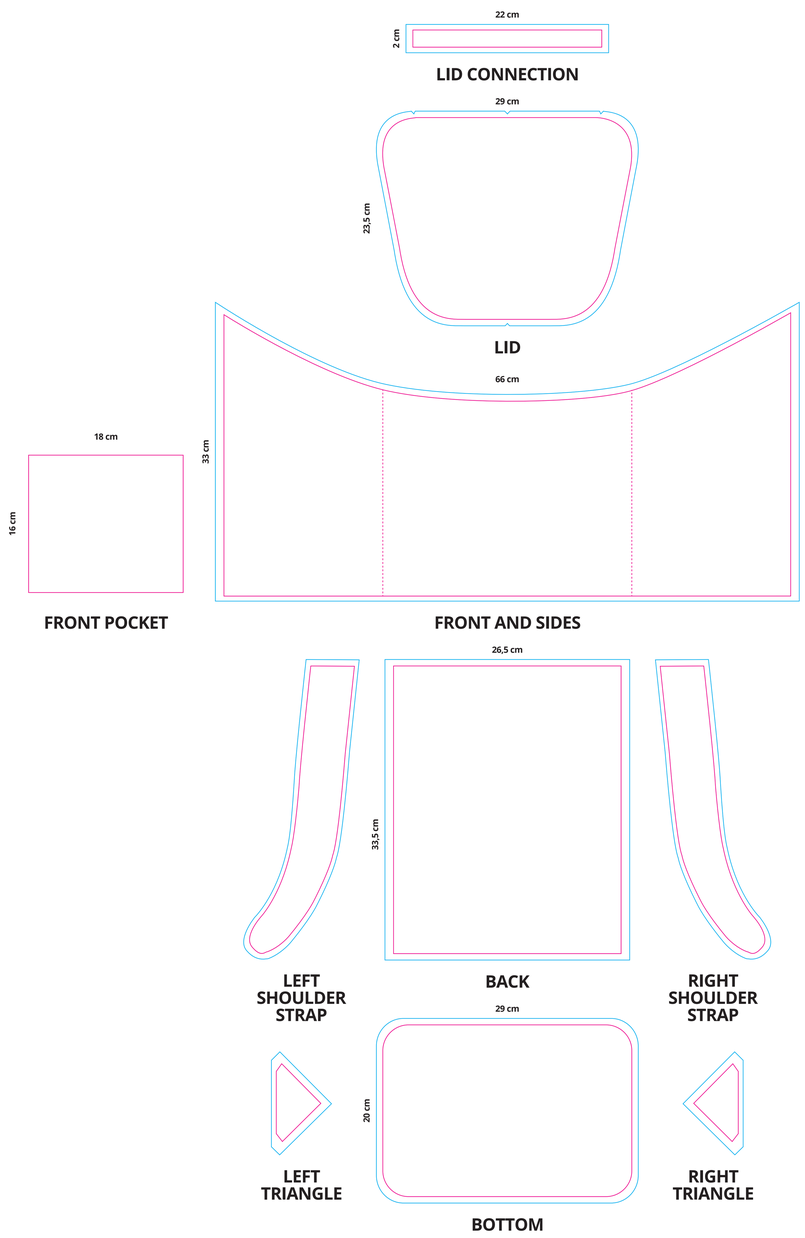

LEGEND:

- BLEED AREA
- FINISHED COMPONENT
- STITCHES